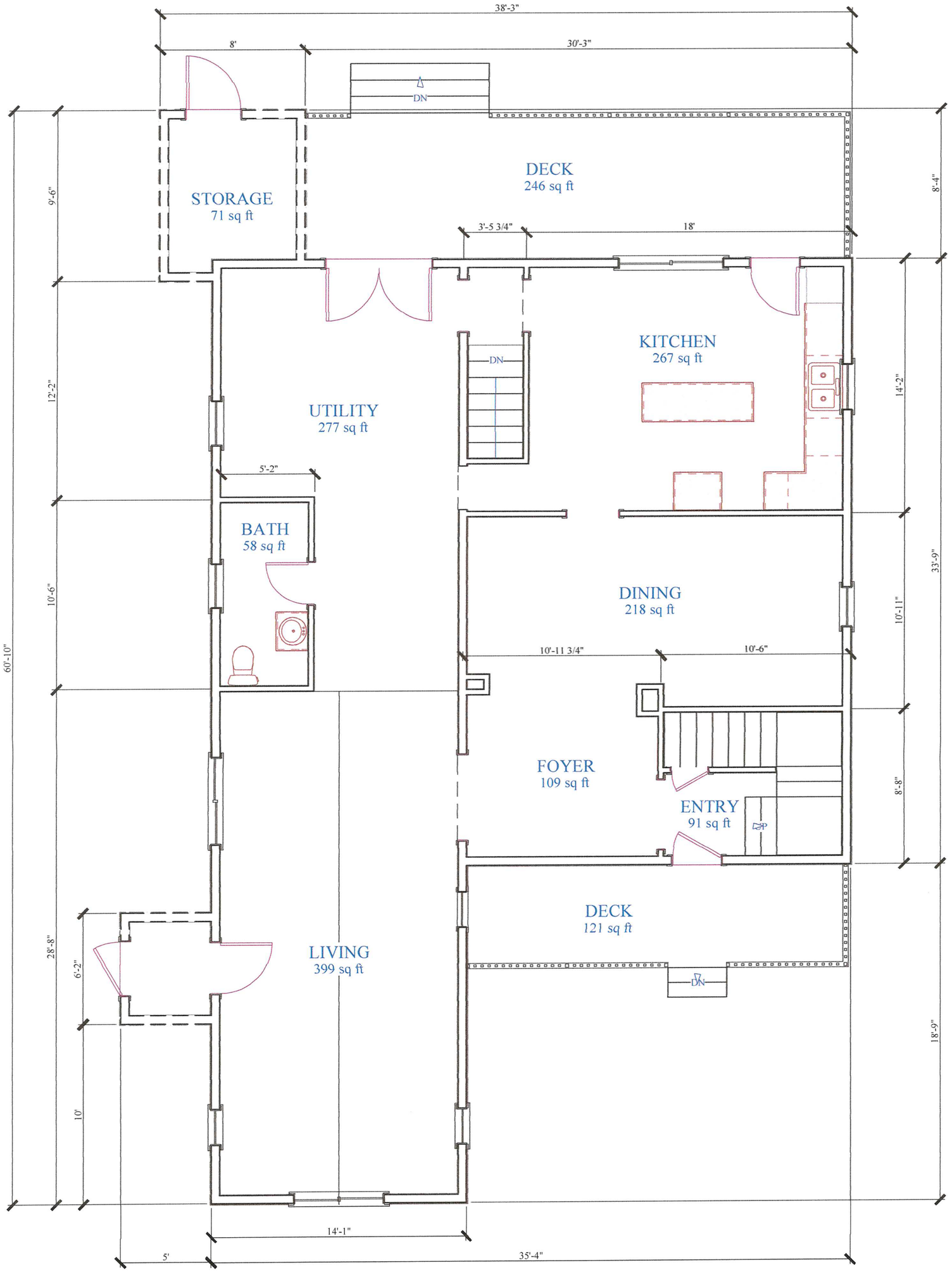

A 1

EXISTING MAIN FLOOR LAYOUT / DEMO PLAN

SCALE: 3/16"=1'-0" (11X17)

EXISTING
DEMO

PRELIMINARY DRAWING, NOT FOR CONSTRUCTION

Signature Design Build
14451 HWY 7 STE B, MINNETONKA MN 55345
WWW.SIGNATUREDESIGNBUILDMN.COM
763.516.2732

DONOVAN TEGG
217 BERNARD ST W.
WEST ST PAUL, MN 55118

BY	REVISION	DATE
JOB #: 15062		5/12/2016
DRAWN BY: B.KEMP		
APPROVED:		
SCALE: AS NOTED		
PRINTED ON: 11X17		

SHEET #
1

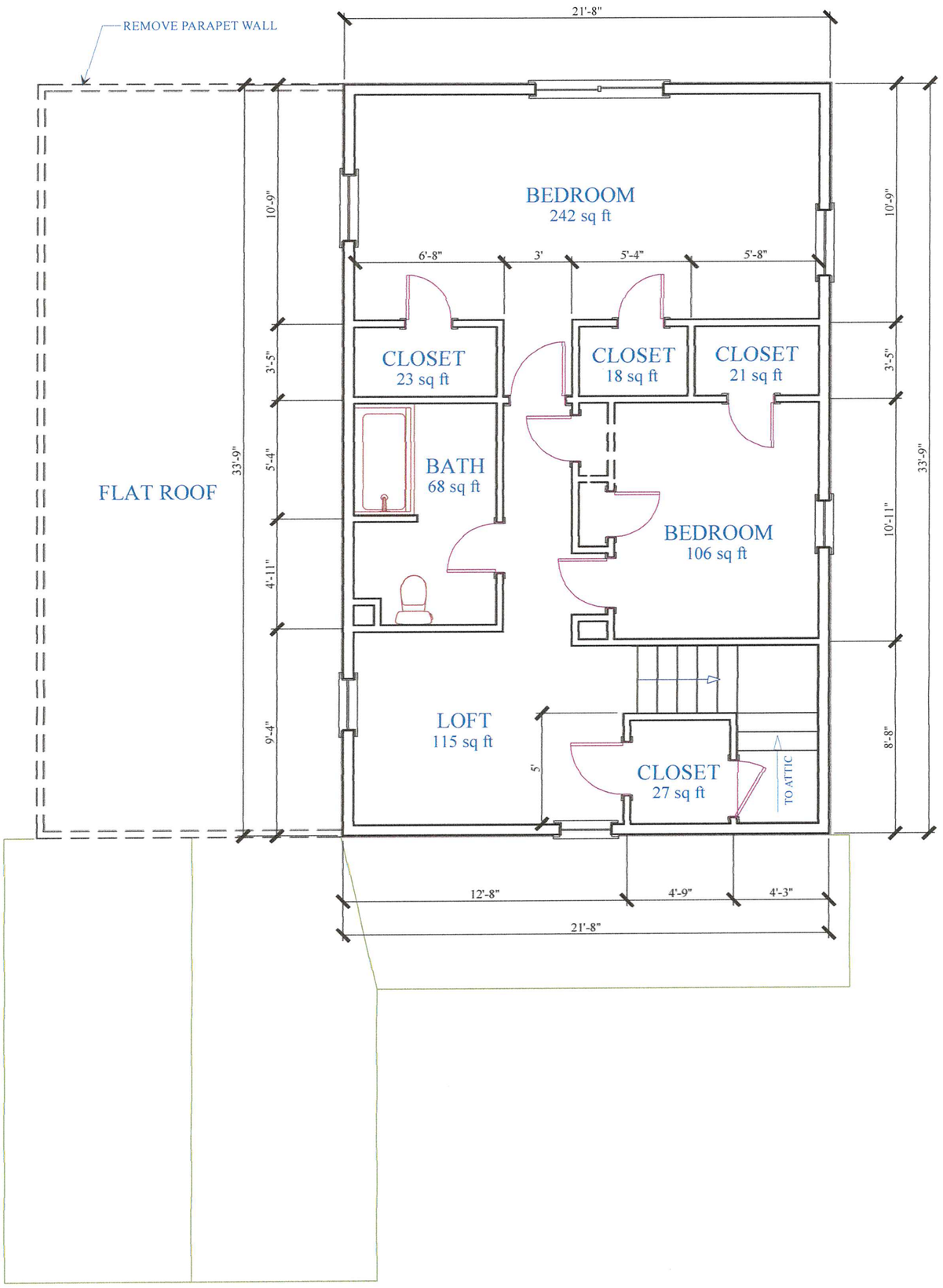

A 2 EXISTING 2ND FLOOR LAYOUT / DEMO PLAN

SCALE: 3/16"=1'-0" (11X17)

EXISTING
DEMO

PRELIMINARY DRAWING, NOT FOR CONSTRUCTION

Signature Design Build
14451 HWY 7 STE B, MINNETONKA MN 55345
WWW.SIGNATUREDESIGNBUILDMN.COM
763.516.2732

DONOVAN TEGG
217 BERNARD ST W.
WEST ST PAUL, MN 55118

BY	REVISION	DATE

JOB #: 15062 5/12/2016
DRAWN BY: B.KEMP
APPROVED:
SCALE: AS NOTED
PRINTED ON: 11X17

SHEET #
2

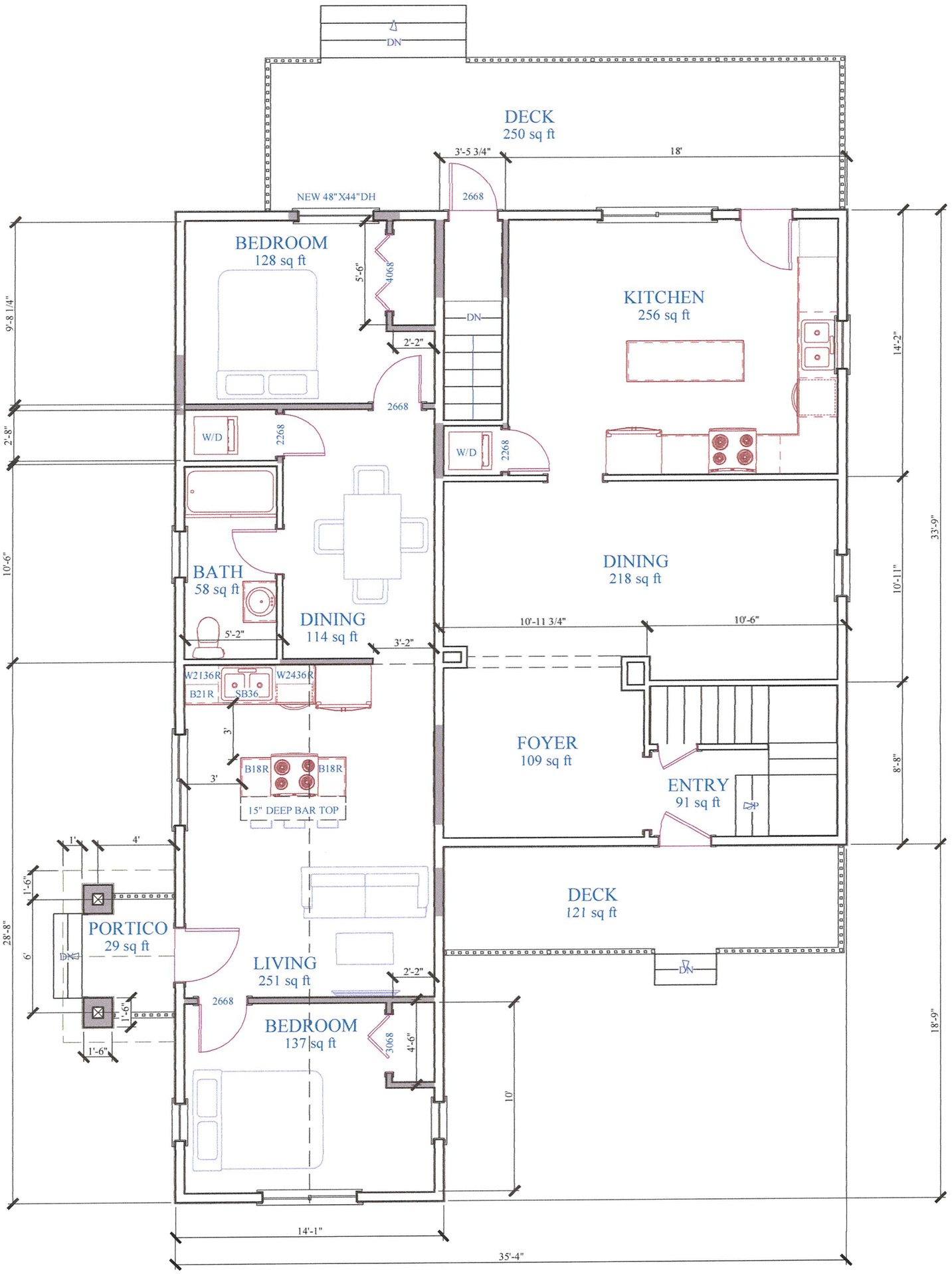

A 3 **PROPOSED MAIN FLOOR LAYOUT**

SCALE: 3/16"=1'-0" (11X17)

EXISTING
NEW

PRELIMINARY DRAWING, NOT FOR CONSTRUCTION

Signature Design Build
14451 HWY 7 STE B, MINNETONKA MN 55345
WWW.SIGNATUREDESIGNBUILDMN.COM
763.516.2732

DONOVAN TEGG
217 BERNARD ST W.
WEST ST PAUL, MN 55118

BY	REVISION	DATE
JOB #: 15062		5/12/2016
DRAWN BY: B.KEMP		
APPROVED:		
SCALE: AS NOTED		
PRINTED ON: 11X17		

SHEET #
3

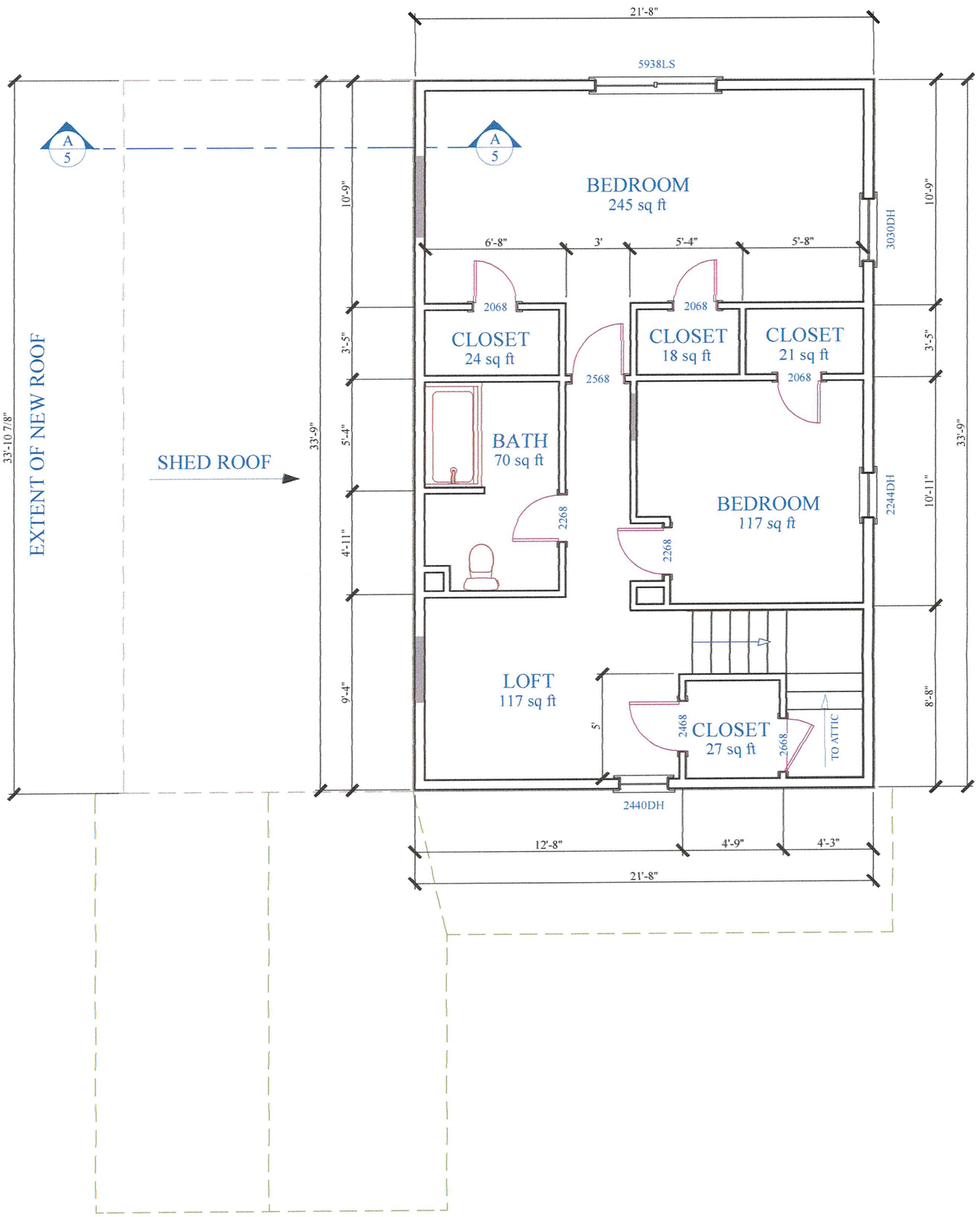

A 4 PROPOSED 2ND FLOOR LAYOUT

SCALE: 3/16"=1'-0" (11X17)

EXISTING
NEW

PRELIMINARY DRAWING, NOT FOR CONSTRUCTION

Signature Design Build
14451 HWY 7 STE B, MINNETONKA MN 55345
WWW.SIGNATUREDESIGNBUILDMN.COM
763.516.2732

DONOVAN TEGG
217 BERNARD ST W.
WEST ST PAUL, MN 55118

BY	REVISION	DATE

JOB #: 15062 5/12/2016
DRAWN BY: B.KEMP
APPROVED:
SCALE: AS NOTED
PRINTED ON: 11X17

SHEET #
4

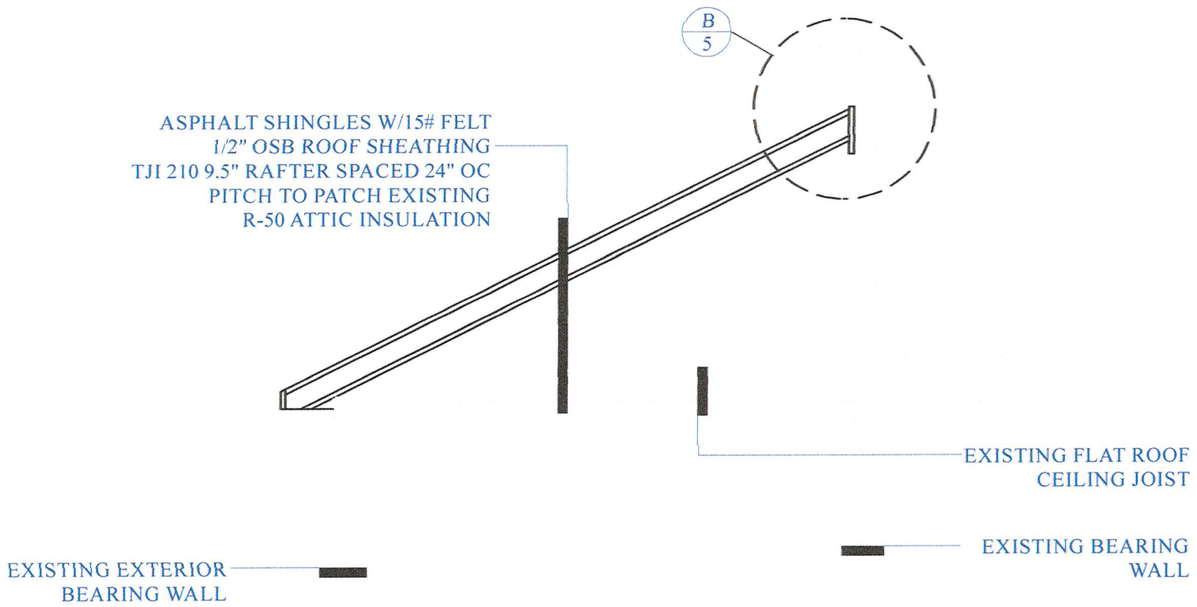

A/5 CROSS SECTION

SCALE: 1/4"=1'-0" (11X17)

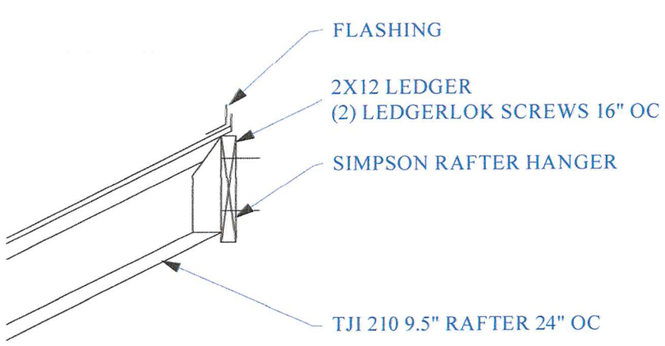

B/5 RAFTER LEDGER DETAIL

SCALE: 3/4"=1'-0" (11X17)

PRELIMINARY DRAWING, NOT FOR CONSTRUCTION

Signature Design Build
14451 HWY 7 STE B, MINNETONKA MN 55345
WWW.SIGNATUREDESIGNBUILDMN.COM
763.516.2732

DONOVAN TEGG
217 BERNARD ST W.
WEST ST PAUL, MN 55118

BY	REVISION	DATE

JOB #: 15062 5/12/2016
DRAWN BY: B.KEMP
APPROVED:
SCALE: AS NOTED
PRINTED ON: 11X17

SHEET #
5