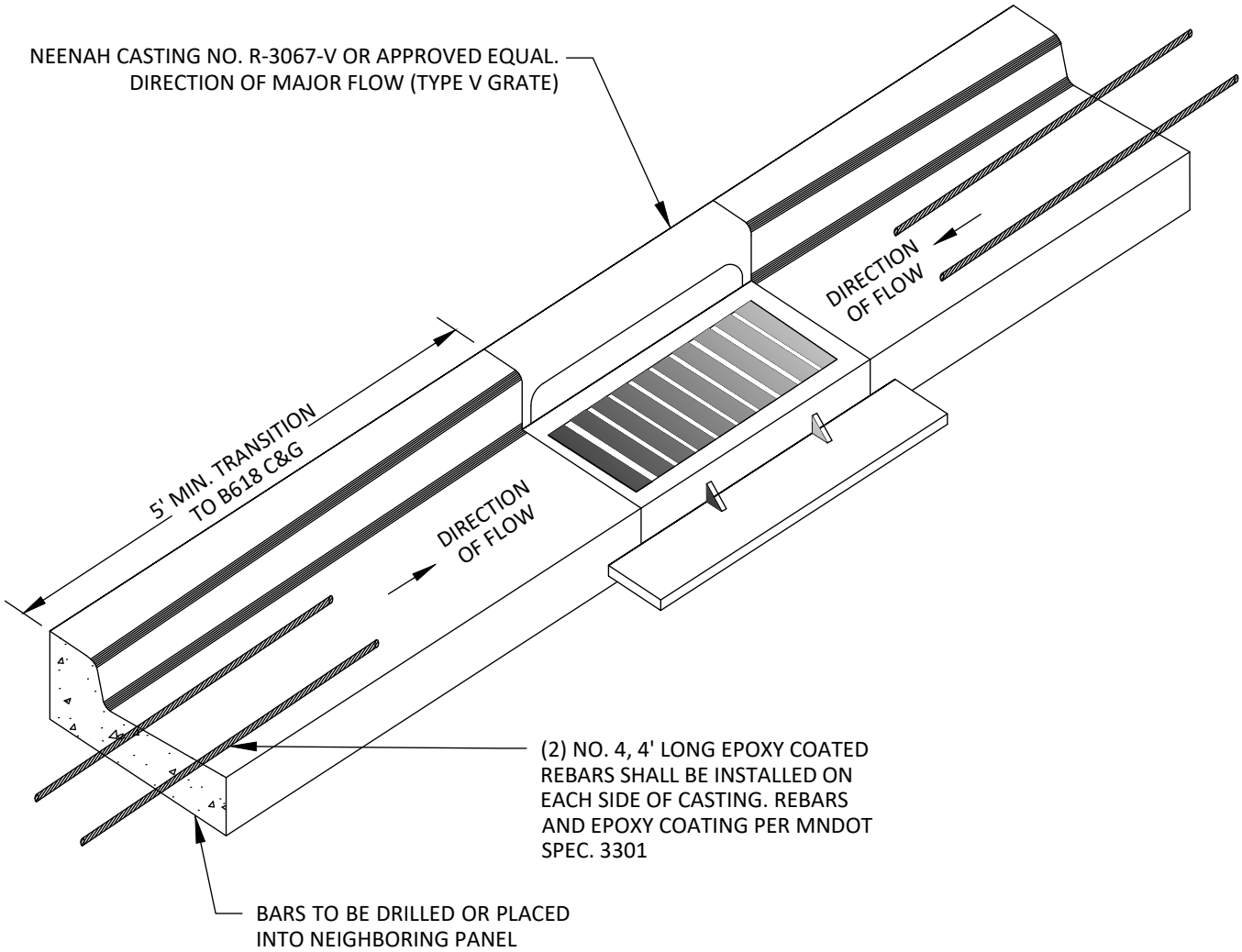

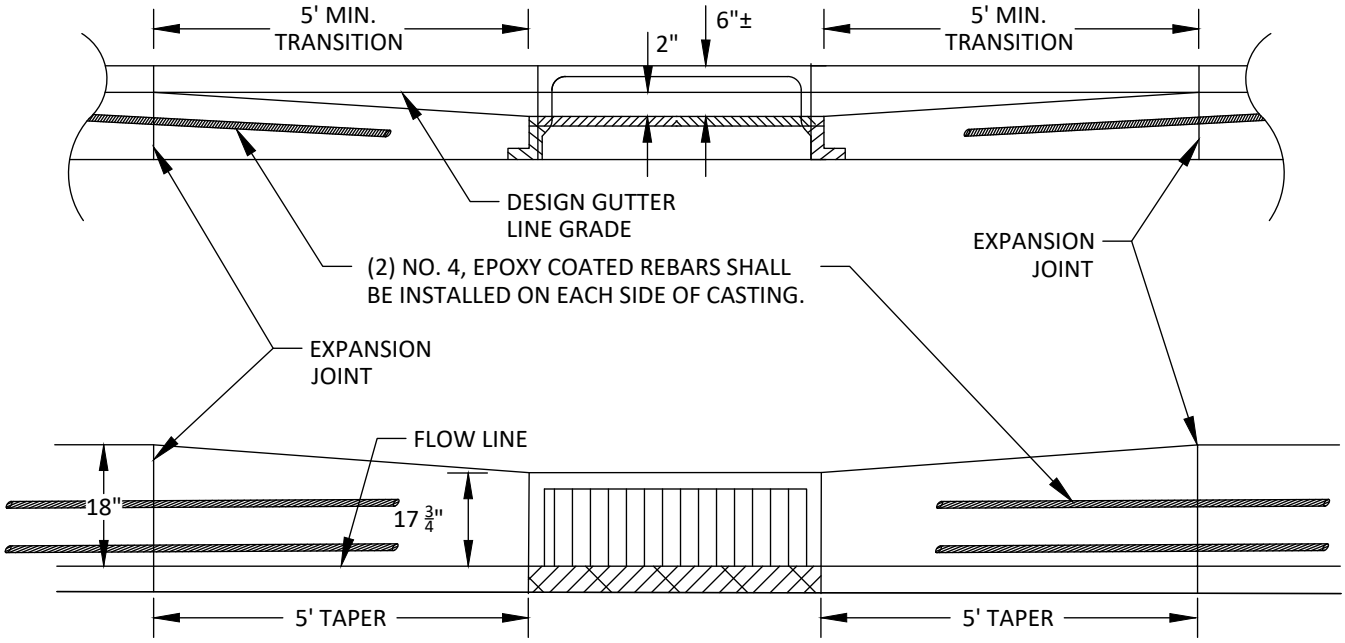

CITY OF WEST ST. PAUL

CATCH BASIN CASTING INSTALLATION

PLATE NO.

STM-05

REVISED 01/25